Integrating BigBOSS with the Mayall Telescope

Robert Besuner[1], Chris Bebek[2], Arjun Dey[3], Will Goble[3], Dick Joyce[3], Michael E. Levi[2], Kevin Reil[4], David Schlegel[2], Michael Sholl[1]

[1]University of California Berkeley, Space Sciences Laboratory
[2]Lawrence Berkeley National Laboratory
[3]National Optical Astronomy Observatory
[4]SLAC National Accelerator Laboratory

ABSTRACT

BigBOSS is a proposed ground-based dark energy experiment to study baryon acoustic oscillations (BAO) and the growth of large scale structure. It consists of a fiber-fed multi-object spectrograph designed to be installed on the Mayall 4-meter telescope at Kitt Peak, Arizona. BigBOSS includes an optical corrector assembly and 5000-fiber-positioner focal plane assembly that replace the existing Mayall prime focus hardware. 40-meter long optical fiber bundles are routed from the focal plane, through the telescope declination and right ascension pivots, to spectrographs in the thermally insulated FTS Laboratory, immediately adjacent to the telescope. Each of the ten spectrographs includes three separate spectral bands. The FTS Laboratory also houses support electronics, cooling, and vacuum equipment. The prime focus assembly includes mounts for the existing Mayall f/8 secondary mirror to allow observations with Cassegrain instruments. We describe the major elements of the BigBOSS instrument, plans for integrating with the Telescope, and proposed modifications and additions to existing Mayall facilities.

Keywords: dark energy, multi-object spectrograph, baryon acoustic oscillations, Mayall

1 INTRODUCTION/SYSTEM OVERVIEW

BigBOSS is a proposed multi-object spectrograph planned for NOAO's Mayall 4-meter telescope at the Kitt Peak National Observatory (KPNO) in Arizona. Its main objective is to study dark energy using the baryon acoustic oscillation (BAO) method, measuring the redshifts of tens of millions of galaxies during 500 observing nights over five years[1, 2, 3]. Figure 1 illustrates the proposed implementation at the Mayall facility. Figure 2 shows the BigBOSS system block diagram, which lists the main elements and illustrates how the elements interface with each other and with the Mayall observatory.

BigBOSS includes a new upper ring at the top of the existing telescope, replacing the existing flip ring assembly. This new upper ring supports the BigBOSS prime focus cage via eight spider vanes. A motorized hexapod system supports the corrector barrel, containing the corrector optics. The corrector includes motor-driven atmospheric dispersion corrector (ADC) elements in addition to four fixed lenses. These optics convert the f/2.8 beam from the primary mirror to an f/4.5, chief-ray near-normal beam, better suited to feeding optical fibers and to providing an optimized plate scale for the BigBOSS survey.

The focal plane assembly consists of a perforated focal plate populated with 5000 robotic fiber optic positioners, each of which independently targets an optical fiber to a galaxy for each ~1000-second exposure. The focal plate also supports guiding and wavefront sensors that provide pointing, focus, and alignment information. A thermal enclosure and cooling system ensure that heat from the positioners and other prime focus elements do not affect telescope seeing. Feedback for the positioning of each of the optical fibers is provided by back-illuminating all the fibers and using a fiber view camera mounted to the primary mirror baffle to image each of the fiber tips relative to fiducial fibers.

The optical fibers are bundled into cables, each containing 500 fibers. These ten 40-meter cables (along with electrical cabling) are routed from the thermal enclosure at the top end of the prime focus assembly, along the prime focus spider

vanes, down from the upper ring to the telescope center section. There they continue through the cable bending-management system at the declination axis, through the telescope's East Coudé tube, and another cable bending-management system at the right ascension axis, and then into the nearby environmentally-controlled FTS Laboratory. Each fiber optic cable terminates in a slit assembly that is installed in a spectrograph.

Each spectrograph collimates the light from its 500 fibers, divides the collimated beam into three wavelength bands using dichroic beam splitters, then disperses each channel using an individual volume phase hologram (VPH) diffraction grating through a camera to its respective CCD detector. Each of the thirty total detectors (ten three-channel spectrographs) is installed in its own cryostat which is mounted with fine tip-tilt-piston adjustment to its respective camera. Each spectrograph is calibrated using a calibration illuminator that projects a flat field on each detector. A mechanical shutter in each spectrograph is used during CCD readout and for dark current measurements. Signals from the spectrograph's detectors are routed to nearby front end electronics modules, which convert them to robust digital data that is fed to the data acquisition system, then onward to data storage and analysis.

All the BigBOSS subsystems are controlled and monitored by the instrument control system (ICS), which also communicates with the telescope control system (TCS) to monitor dome conditions and for pointing and guiding.

When Cassegrain instruments are used, the existing f/8 secondary mirror is installed using an f/8 exchange system.

To cut down on travel up and down the mountain, and to minimize heat sources in the dome, a remote telescope and instrument control capability in Tucson is proposed.

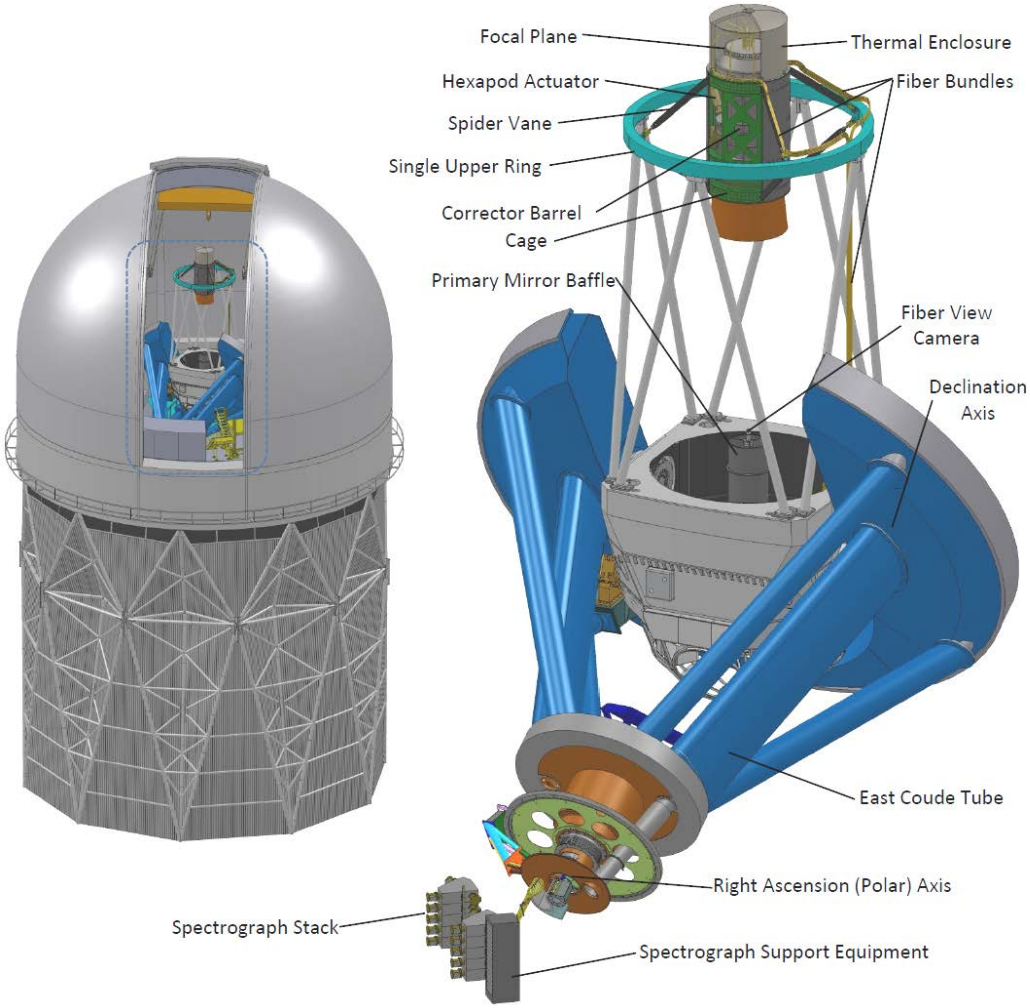

Figure 1: Elements of BigBOSS on the Mayall 4m telescope.

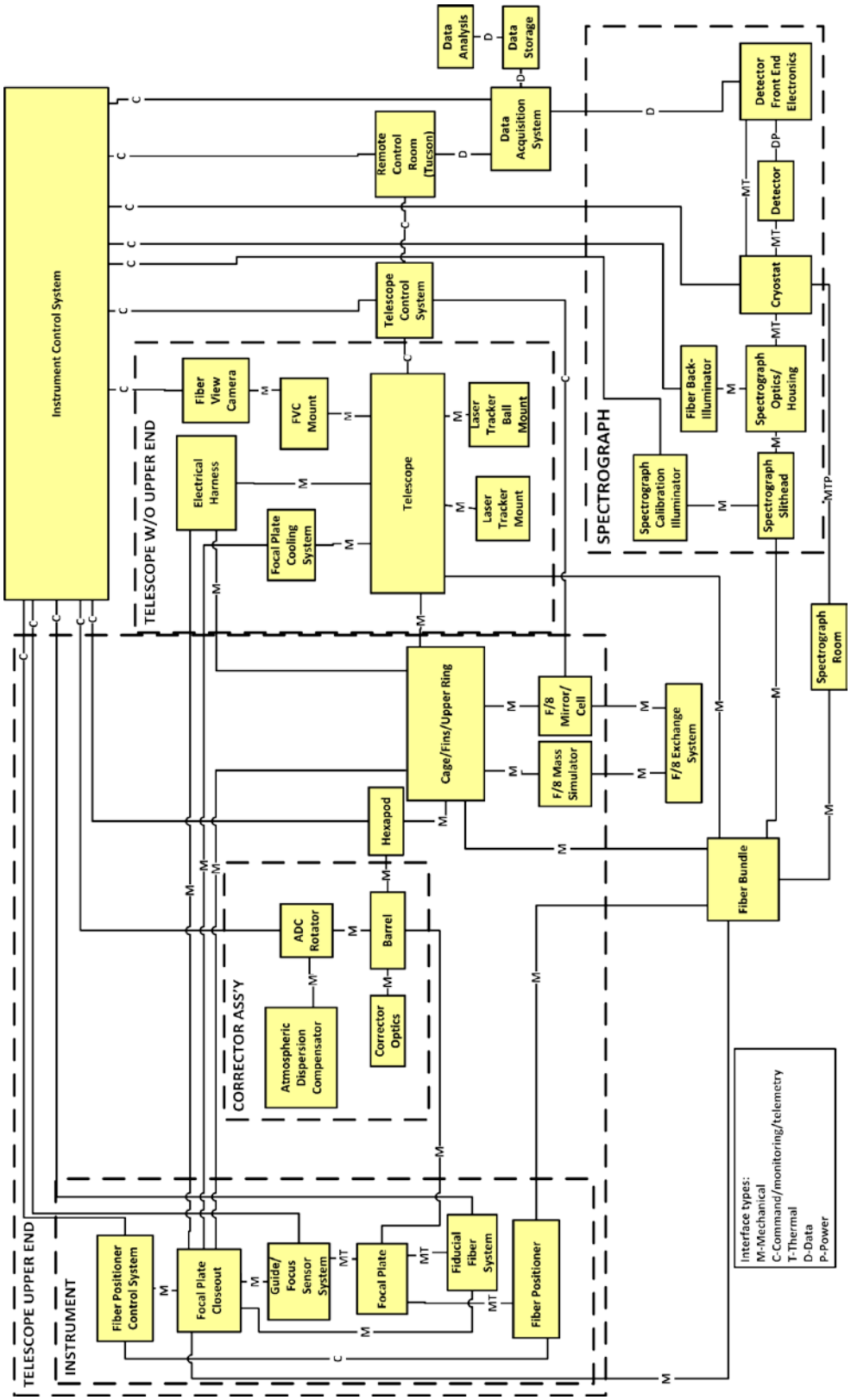

Figure 2: BigBOSS system block diagram, showing system elements in rectangles and interfaces as lines

2 INTERFACE REQUIREMENTS/GOALS

Some requirements and goals for the BigBOSS instrument interface to the Mayall observatory facility include:

Safety: First and foremost, personnel, equipment, and environmental safety will be ensured at all times. At a minimum, the most stringent of the safety standards of the institutions involved in any activity shall be exercised.

f/8 secondary mirror exchange: Provision must be made for installation of the existing f/8 secondary mirror and tip/tilt/piston cell to enable Cassegrain instruments to be used during the BigBOSS campaign. In order to minimize impact on telescope balance, an f/8 mass dummy is installed when the mirror is removed. The exchange between mirror and mass dummy can be completed during one day to avoid interruptions in observing time. The mounting of the mirror and cell must be repeatable to approximately 1 mm.

Thermal: Any heat or thermal gradients generated must be managed to avoid creating seeing-degrading thermal plumes in the telescope field of view. This requirement has implications mainly for the heat generated within the prime focus thermal shroud (fiber positioners/positioner controllers, guide/focus sensors, etc.), by the fiber view camera, and by the spectrographs and spectrograph support equipment. There may also be requirements to upgrade the existing cooling capabilities available at the facility.

Mass on telescope: The BigBOSS mass goal is for the new hardware on the upper telescope structure not to exceed the existing hardware it replaces. By maintaining the same mass properties as currently exist, telescope balance will be easily maintained, load capacity of all elements will not be exceeded, and the Serrurier truss behavior will not change[4]. In addition, if mass moments of inertia are unchanged, the telescope pointing control laws and slew/settling times will be unaffected by the integration of BigBOSS to the telescope.

Optical: Obscuration due to the BigBOSS prime focus cage, spider vanes, and utilities (cables, hoses, etc.) carried from the cage to the upper ring must be kept to a minimum. Stray light must be managed, both for BigBOSS and for Cassegrain instruments.

Telescope Control System: A communications protocol between the Mayall TCS and the BigBOSS ICS is necessary to ensure proper pointing and guiding.

RF energy: Radio astronomy activities on Kitt Peak may require shielding of any radio frequency energy-emitting equipment that is part of BigBOSS.

General compatibility with facility: BigBOSS hardware must be physically able to be brought on site and up into the dome. To allow normal craning operations during maintenance and upkeep times, BigBOSS must be short enough to that it is cleared by the dome crane when at zenith. Torques due to cable management systems through the telescope pivots must be low enough and sufficiently constant so they do not adversely affect the telescope pointing control system.

3 UPPER ASSEMBLY

3.1 Replacing Existing Telescope Upper Assembly

To switch between Prime Focus observations and Cassegrain observations, the Mayall Telescope currently employs a flip ring within the telescope upper ring to present either refractive optics or the f/8 secondary mirror to light from the primary mirror, as shown in Figure 3. For BigBOSS, we propose to replace the upper ring/flip ring assembly with a single, fixed ring. This is for two main reasons: first, the large number of optical fibers fed from prime focus to the telescope truss and their limited flexibility severely limits the practicality of using the existing flip function; and second, using the single ring offers a mass saving of approximately 2250 kg versus the flipping assembly. The optics and structure of the BigBOSS prime focus assembly are predicted to exceed that of the existing prime focus assembly by approximately that same 2250 kg. This allows BigBOSS to maintain the mass, inertia, balance, and Serrurier truss behavior of the existing Mayall Telescope configuration.

Figure 3: Existing Mayall prime focus flip mechanism.

The BigBOSS upper assembly will be integrated with the telescope locked at zenith, using the existing 50-ton dome crane. The general integration scheme is illustrated in Figure 4. Bracing and scaffolding (not illustrated) will be installed on the upper trusses to maintain their stability and provide personnel access. The existing prime focus assembly will be lifted just above the truss struts using the existing 50-ton dome crane. The two north upper truss struts will be removed to allow horizontal passage of the prime focus assembly (there is insufficient dome crane height to lift the assembly over the truss elements). The existing prime focus cage, spiders, flip ring, and upper ring will be removed as an assembly moving horizontally to the north. Next, the BigBOSS upper assembly will be positioned over the trusses, the north truss struts re-installed, and the BigBOSS upper assembly lowered and fastened to the trusses.

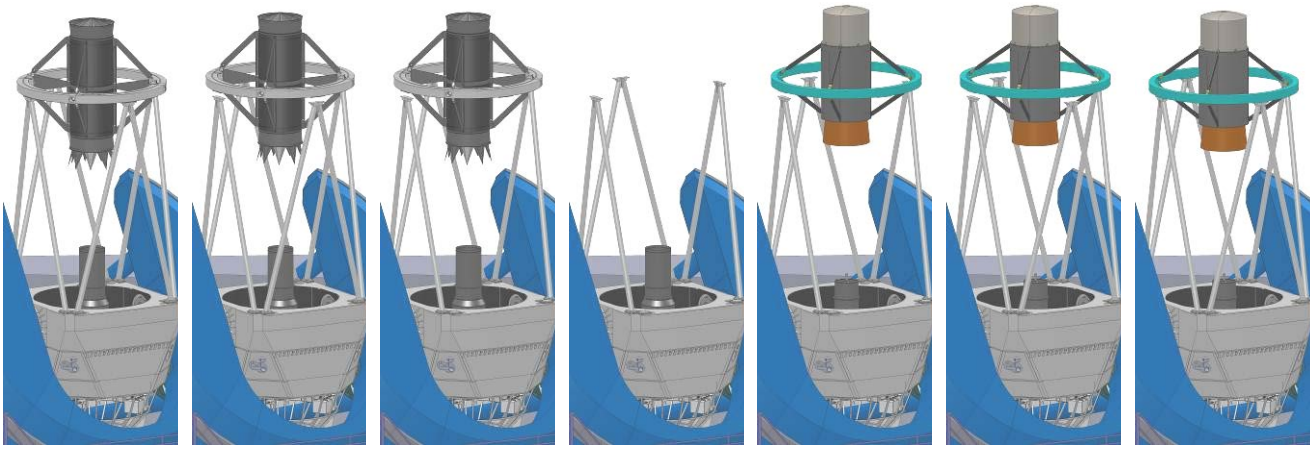

Figure 4: Sequence for integration of BigBOSS upper assembly. Lift existing upper assembly from trusses, remove northern truss pair, remove existing upper assembly, position BigBOSS upper assembly over trusses, replace northern truss pair, lower and fasten BigBOSS upper assembly to trusses.

3.2 f/8 Secondary Mirror Exchange

To enable observations with Cassegrain instruments during the 5 year BigBOSS campaign, the existing f/8 secondary mirror and its tip/tilt/piston cell is expected to be installed and removed roughly monthly. To maintain telescope balance, when the f/8 secondary assembly is not installed, an approximately 1200 kg mass dummy will be installed in its place. Without the existing flip function at prime focus, the mirror or mass dummy must be accessed from between the prime focus assembly and the telescope center section, where there is limited access.

The plan to effect this exchange is to use the existing 5-ton dome crane to hoist the mirror or dummy away from the BigBOSS cage and move it to its storage area. The best access to the mirror from overhead is afforded when the telescope is aimed near the horizon toward the northwest, northeast, southwest, or southeast, so the ‘V’ formed by pairs of truss struts is the most wide open. The southeast direction is preferred because there is open floor space for personnel below the prime focus assembly when the telescope is pointed there. Figure 5 shows the telescope in this position, viewed looking southwest.

Figure 5: View looking southwest with the Mayall Telescope pointing generally southeast at approximately 10 degrees elevation.

Figure 6 shows overhead views of the telescope upper end with BigBOSS integrated. The three configurations shown are with the f/8 mass dummy, with no hardware attached, and with the f/8 mirror, cell, and baffle installed. These views show that the 'V' formed by the truss struts is large enough to allow unobstructed access. When aimed away from optimal compass directions, the telescope rolls about its axis with respect to the ground, so the truss elements do not align as favorably.

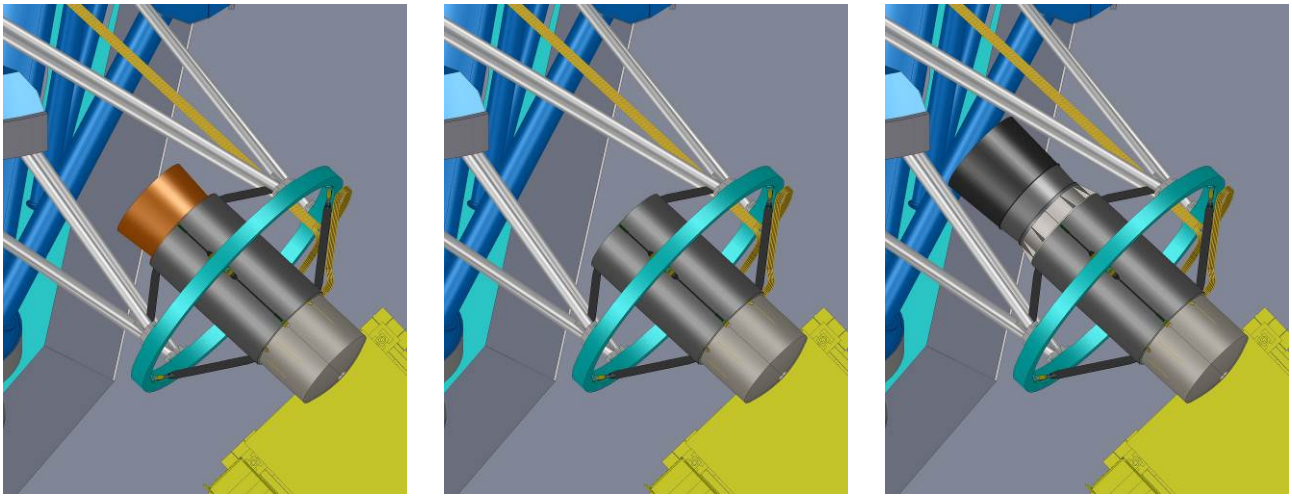

Figure 6: Overhead view showing dome crane access to f/8 hardware

Note that the secondary mirror baffle illustrated is not currently existing hardware. It is required for stray light management only after BigBOSS is integrated as discussed in Section 7.

3.3 Prime Focus Accelerometer Testing

Initial finite element modal analysis on the existing telescope structure indicates the lowest natural frequency is a rotational mode of the prime focus cage about the optical axis in the 1.5-3 Hz range (depending on cage mass moments and spider vane tension). The outermost BigBOSS fiber positioners are nearly 0.5 m from the center of the focal plane, while MOSAIC, the current prime focus instrument on the Mayall, has pixels at a maximum of 0.09 m from the axis of the cage[5]. Assuming similar spider vane behavior and prime focus cage mass moments, the larger lever arm on the BigBOSS focal plane will result in larger displacements for a given angular vibration amplitude. The finite element model is insufficient to predict the in-service amplitude of the prime focus cage mode because the base inputs exciting this mode and the damping behavior of the structure are unknown.

To estimate the magnitude of motion of the outermost fiber optics for BigBOSS and to characterize the overall modal and damping behavior of the upper end of the telescope, the existing prime focus cage has been instrumented with six micro-g scale accelerometers. These accelerometers are mounted in pairs distributed around a structural ring inside the cage, with one of each pair aligned with the optical axis and the other tangent to the ring. Two of these installed pairs are shown in Figure 7. Matrix manipulation of the outputs from these accelerometers gives translational and angular accelerations in the principal orthogonal axes of the telescope. The data for these tests are recorded at 200 samples per second.

Figure 7: Four of the six accelerometers installed in the existing Mayall prime focus cage.

Impulse excitation of the upper end of the telescope has verified that the fundamental mode is a torsional oscillation of the prime focus cage. Angular acceleration output from impulse testing along with a best-fit exponentially decaying sinusoid for that mode is shown in Figure 8. These data indicate a natural frequency of 2.3 Hz and a damping ratio of 0.0023.

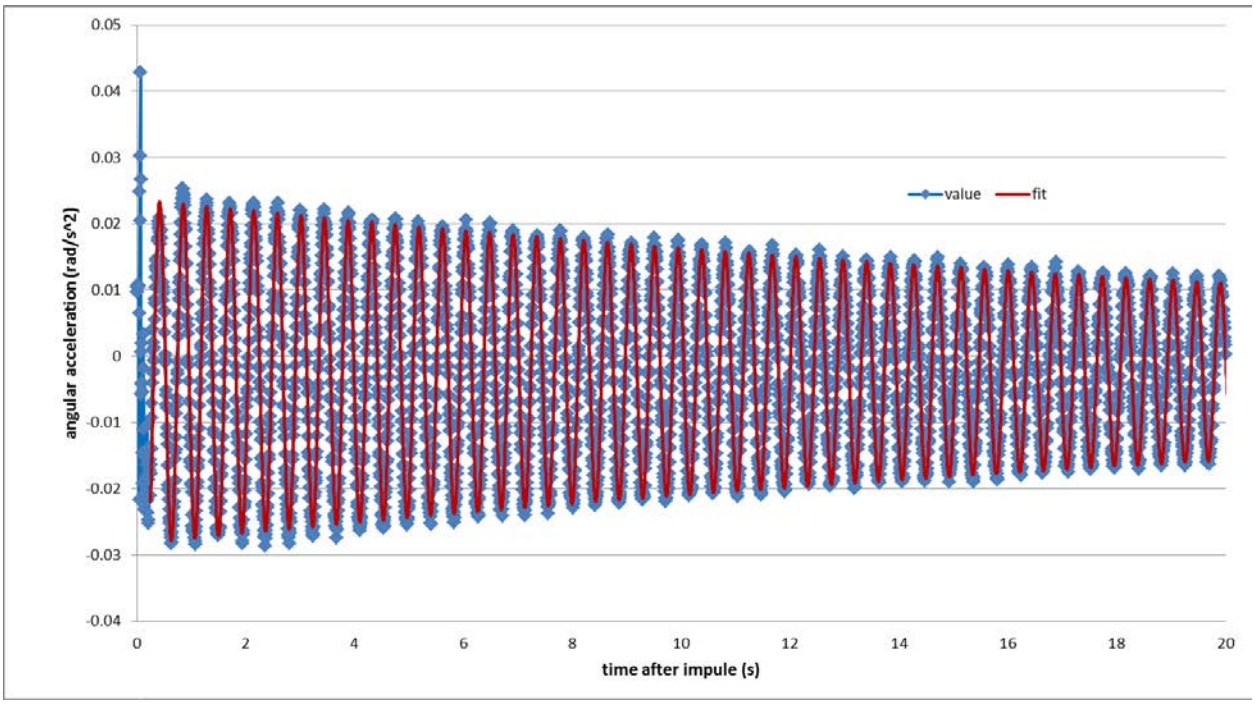

Figure 8: Impulse response of existing prime focus cage. Measurement is angular acceleration about the telescope axis.

Data from the accelerometers are also continuously recorded during observing nights in order to understand actual accelerations experienced in service. To date, the largest measured angular displacement amplitude would equate to a 5 µm displacement at the outermost fiber optics on a 1 m diameter focal plane. Note that the fiber core diameter for BigBOSS is 120 µm. The 5 µm oscillation displacement amplitude causes less than 0.1% reduction in galaxy light throughput for fibers at the periphery of the focal plane, which is an acceptable loss.

4 FIBER HARNESS MANAGEMENT AT PIVOTS

The 40-meter long fiber optic cables pass from the prime focus assembly, which rotates within a nearly hemispherical range, to the spectrographs, which are fixed. Each of the cables includes a tension bearing core element, along with external shielding for mechanical and environmental protection of the fibers. Each cable is 25 mm in diameter, and is restricted to bending radii 200 mm or larger, with essentially zero permitted twisting. To maintain these deflection constraints, while allowing the cables to pass through the telescope pivots, e-chain (Igus® Energy Chain® or equivalent) cable management assemblies are used. This ensures that the cable motions are well-defined, that they experience pure bending, and that they do not bend more sharply than permitted. To minimize sliding or axial motion of the harnesses, the cables run side-by-side in the e-chain, so the cable neutral axes are near the center of the height of the e-chain, where there is no length change of the assembly. The fiber management schemes at the two telescope pivots are shown in Figure 9.

At the declination axis, there is an existing 0.60-meter diameter hole through the east pivot where primary mirror temperature-management air is blown or drawn. Inside the horseshoe, adjacent to that hole is a beveled cylindrical weldment that acts as a right angle fitting for that primary mirror air handling system. The inside of that cylinder is large enough to accommodate a spiral style e-chain configuration as shown in the upper right of Figure 9. In this arrangement, as the inner and outer elements rotate relative to one another, the chain grows or shrinks in diameter. At one extreme it wraps tightly on the inner spindle as shown in the figure, and at the other extreme, it is pressed against the inside of the larger cylinder. 180° of total relative rotation are possible, accommodating the declination travel range of 164°. From this spiral chain assembly, the cables pass through the East Coudé tube of the telescope horseshoe, paralleling the primary mirror ventilation ducting.

The right ascension axis cable management system is at the southern (lower) end of the telescope mount. Because there is less volume constraint here than at the declination axis, and because the cables have to traverse west to the FTS Laboratory, a reverse-bend e-chain is used. In this implementation, an e-chain that articulates both ways from flat is employed. To constrain the motion of the e-chain, inner and outer cylindrical guide trays are required.

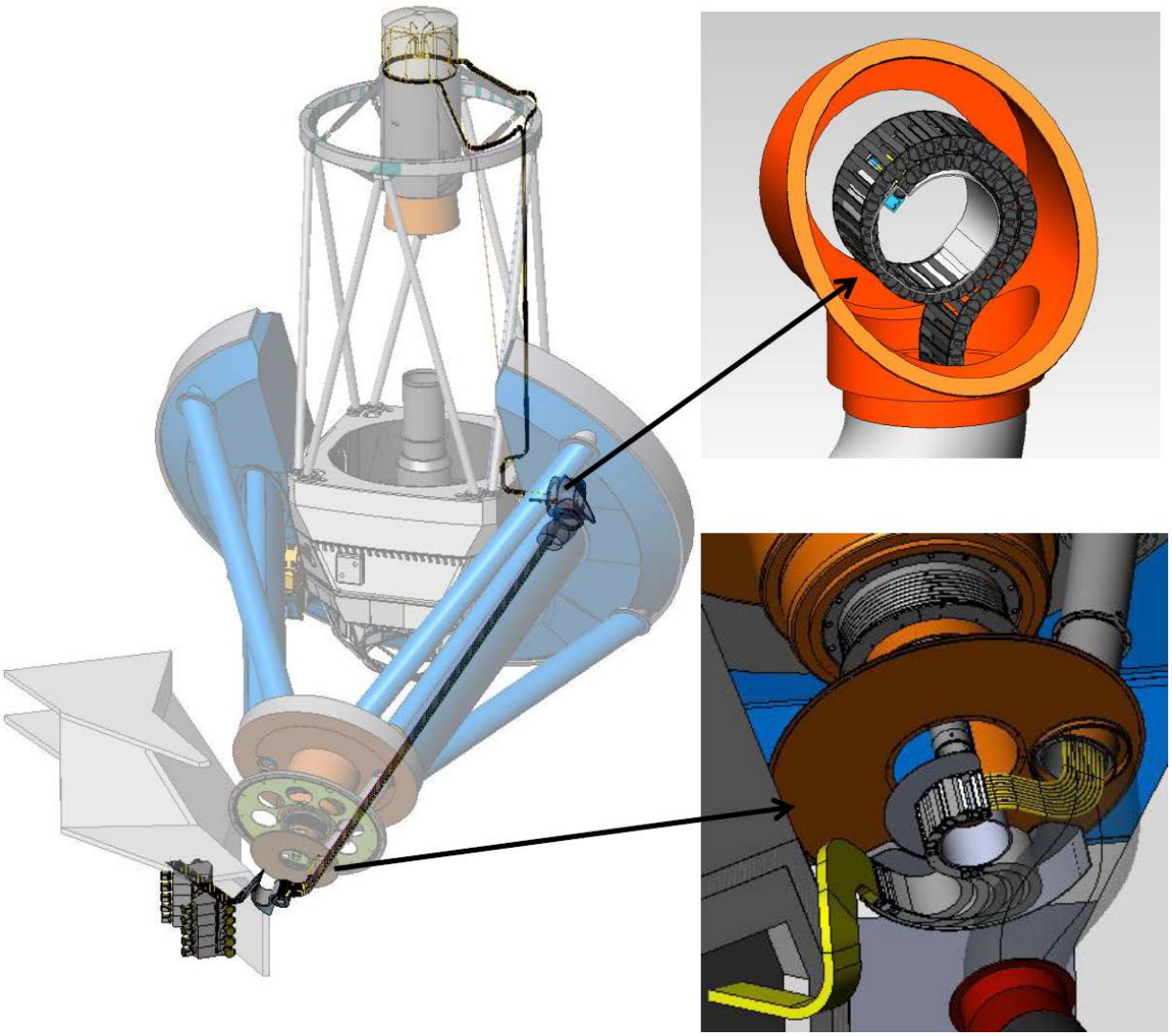

Figure 9: Fiber Optic Cable Management. 40-meter fibers run from focal plane near top of left figure to spectrographs in FTS Lab near lower left of left figure. Upper right figure: Spiral e-chain configuration at Declination Axis. Lower right figure: Reverse-bend e-chain configuration at Polar Axis.

5 SPECTROGRAPHS

The ten three-channel spectrographs and their support equipment will be installed in the FTS Laboratory immediately west of the right ascension axis cable management system. The FTS Laboratory is located on the same 'hammerhead' pier structure as the telescope, which is isolated from the rest of the observatory building, ensuring a stable platform for the spectrograph optics. This room is already temperature-controlled, thermally-insulated, and dark, and it is plumbed with the observatory glycol cooling system. This thermally stable environment helps maintain optical alignment and unchanging optical properties of optical glasses and coatings. Each CCD detector is cooled with a linear pulse tube (LPT) cryocooler, and the heat rejected by those cryocoolers and by all the electronics in the FTS Laboratory is carried away by the glycol system.

6 FIBER VIEW CAMERA

Every BigBOSS exposure collects spectra of a different set of target galaxies, requiring each of the 5000 fiber positioners to move to a different position from the previous exposure. The fibers are required to be positioned to within 5 µm of the target on the focal surface. To provide feedback on fiber position and to verify when the fibers are within the tolerance zone, all the fibers are measured relative to fixed fiducial fibers on the focal plane using a CCD fiber view camera. The fiber view camera is mounted to the primary mirror baffle, as shown in Figure 10. A hatch is installed behind the fiber view camera to protect the Cassegrain instrument area. Note that the primary mirror baffle shown replaces the existing primary mirror baffle, as discussed in Section 7. The fiber view camera and the protective hatch are installed only when prime focus observations are being made. For Cassegrain instrument observations, they are removed concurrent with the f/8 secondary mirror exchange.

During the one minute slew and spectrograph CCD readout time between exposures, all 5000 optical fibers along with the fiducial fibers are back-illuminated. The fiber view camera takes images of the illuminated fiber tips through the BigBOSS prime focus corrector, and then centroids for each fiber tip are calculated and used as feedback for the fiber positioners. The new primary mirror baffle must be stiff enough to provide a stable platform for imaging of the fiber tips.

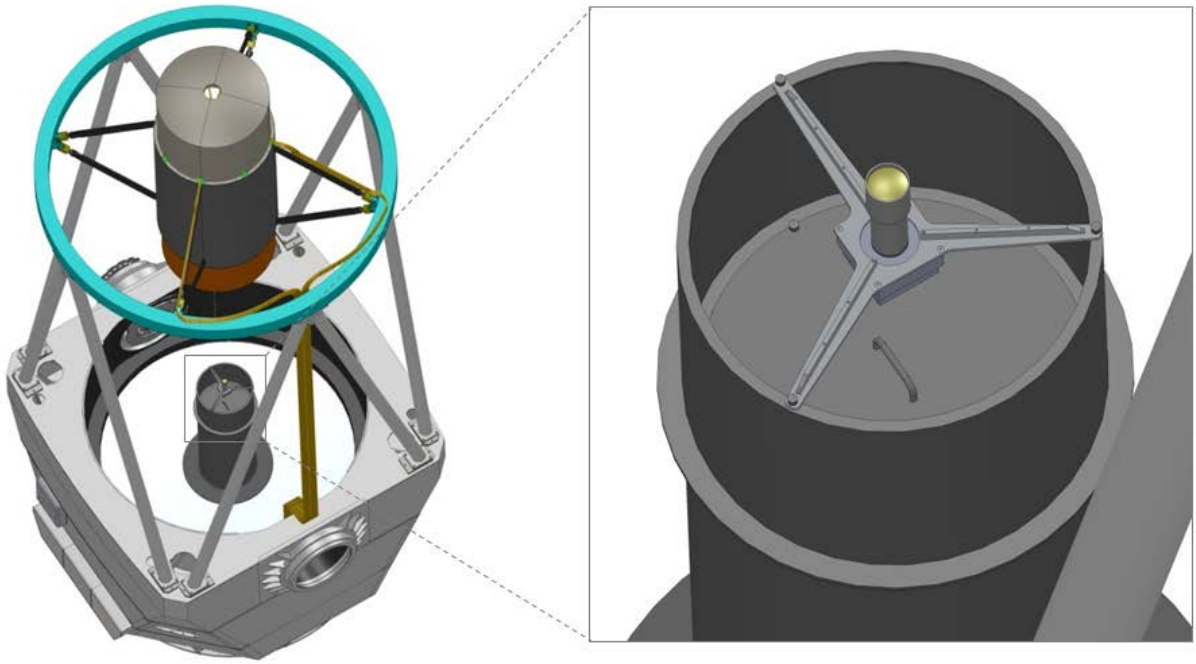

Figure 10: Fiber view camera on new primary mirror baffle. Note hatch (with handle) behind camera to protect Cassegrain hardware.

7 STRAY LIGHT BAFFLES

The 3-degree diameter BigBOSS field of view is far wider than any other instrument yet installed on the Mayall Telescope. Figure 11 shows the extent of the incoming and reflected light bundles with the existing primary baffle installed. As this figure illustrates, the existing primary baffle would vignette some light from the primary mirror. BigBOSS itself does not require a primary baffle, but some Cassegrain instruments require baffling to ensure that there is no direct view of sky light within a certain diameter at the Cassegrain focus. In the case of the Mayall Telescope, the requirement is to block the view of the sky within a diameter of at least 91 mm at the Cassegrain focus, corresponding to the 10 arcminute field of view of the KOSMOS instrument[6]. Other Cassegrain instruments commonly installed on the Mayall Telescope (FLAMINGOS[7] and NEWFIRM[8]) have larger fields of view, but they re-image the focus and employ cold stops that prevent out-of-pupil light from reaching their detectors.

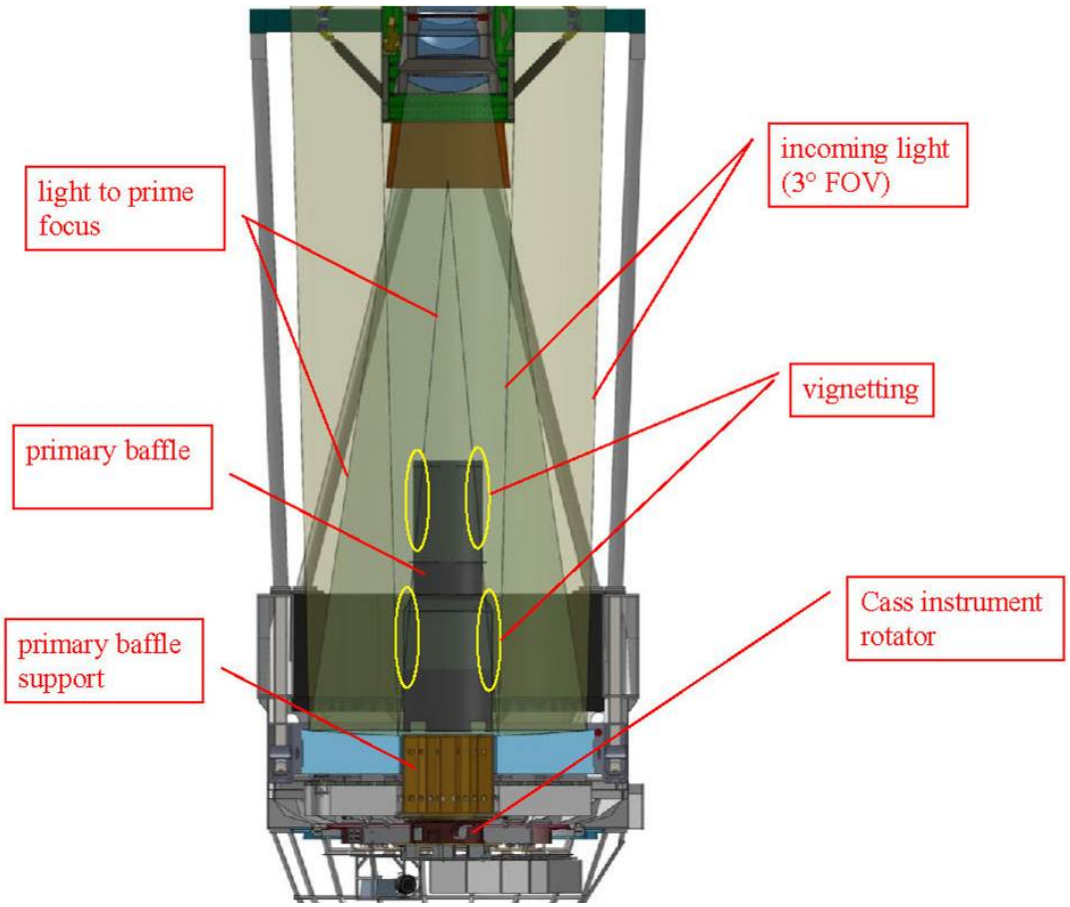

Figure 11: Vignetting of reflected light by the current Mayall primary baffle for the BigBOSS 3° FOV.

To avoid vignetting light, a new, shorter and smaller-diameter primary baffle is proposed. To block the Cassegrain sky-view with this new primary baffle, a new secondary baffle is required when the f/8 secondary mirror is installed. While there are methods for determining optimal Cassegrain baffle configurations that minimize obscuration, block sky view, and avoid vignetting[9, 10], in this case true optimization is not necessary as the obscuration is already defined by the size of prime focus cage. A geometric solution is used that ensures: that the sky is not visible within a 91 mm diameter at Cassegrain focus; that the primary baffle does not vignette BigBOSS or NEWFIRM (39 arcminutes FOV); that the secondary baffle lies in the shadow of the prime focus cage for the NEWFIRM FOV; and that the secondary mirror baffle does not vignette light reflected from the primary mirror to the f/8 secondary mirror. All these conditions are met with realistic margins allowing for manufacturing tolerances and deviations of geometry from nominal. The proposed baffling that meets all the requirements is illustrated in Figure 12, both in Cassegrain and prime focus configurations.

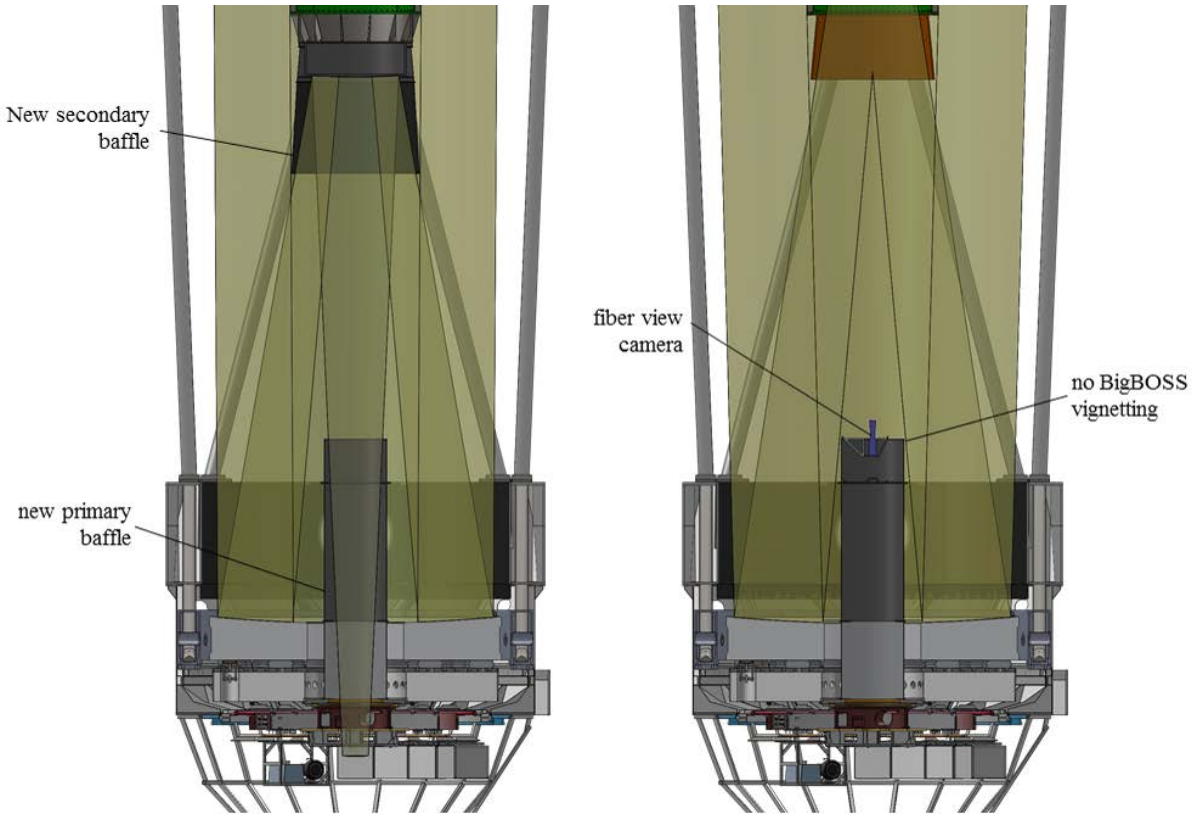

Figure 12: Proposed baffles, left in Cassegrain configuration with NEWFIRM 39' FOV, and right with in prime focus configuration with BigBOSS 3° FOV.

8 ADDITIONAL PROPOSED MAYALL FACILITY MODIFICATIONS

Currently, a delivered image quality (DIQ) improvement study is underway at the Mayall Telescope to identify and quantify sources of image degradation and to develop recommendations for improvements to the telescope and the facility and to its operation. The BigBOSS integration offers an excellent opportunity to implement some or all of these recommendations.

The existing telescope control system may require some upgrades to meet BigBOSS pointing and guiding requirements. Some of these possible upgrades have already been implemented on the Mayall's southern sister, the Blanco telescope in Chile. Studies and experimentation are currently underway with the existing Mayall TCS to better understand its capabilities and limitations.

The Mayall primary mirror axial support system is named the 4m Active Primary Support (4mAPS). This system includes 33 airpads, each of which is pressurized to an individual specific pressure to minimize optical aberrations. These pressures are specified for any given pointing direction in a look-up table[11]. As currently configured, whenever the telescope slews, all the airpad pressures are reduced, then when the slew is complete, they are sequentially increased to their appropriate pressures for that pointing. This sequential process, along with the subsequent mirror settling time represents significant overhead in the time between BigBOSS observations. To meet BigBOSS survey rate requirements, the 4mAPS system may need to be reconfigured to pressurize the airpads in parallel.

During the scheduled Mayall 2012 summer shutdown, fiducial laser tracker retroreflector mounts will be bonded to the outer diameter of the primary mirror while the mirror is removed from the telescope for re-aluminization. With the fiducial mounts populated with retroreflectors, and another retroreflector touching various spots on the mirror surface, a laser tracker will be used to define the spatial relation of the fiducials to the mirror axis and center of curvature. This is the first step in enabling laser tracker alignment of the entire telescope and eventually using laser trackers to aid in integration and alignment of BigBOSS.

9 CONCLUSION

The proposed BigBOSS spectroscopic survey will greatly expand our understanding of dark energy and of the expansion history of the universe. The Mayall 4-meter telescope offers an excellent platform for the BigBOSS instrument, and a practical integration scheme to implement BigBOSS on the Mayall has been devised. Once BigBOSS is integrated with the Mayall Telescope, the powerful multi-object spectroscopy capabilities will also be available to community scientists, and the existing f/8 Cassegrain capabilities of the telescope will be retained for observations during the five year BigBOSS campaign. BigBOSS will help carry on and enhance the already illustrious career of the Mayall 4-meter Telescope.

ACKNOWLEDGMENTS

We gratefully acknowledge Fermilab and the entire Dark Energy Survey team for sharing their experiences and technical information from their integration of the Dark Energy Camera with the Blanco telescope. In particular, we thank Brenna Flaugher, Project Manager for the Dark Energy Camera for her help and advice.

Thanks to Robin Lafever for contributing the cable management figures.

This work was supported by the Director, Office of Science, of the U.S. Department of Energy under Contract No. DE-AC03-76SF00098.

REFERENCES

[1] Schlegel, D., et al, "BigBOSS: The Ground-Based Stage IV Dark Energy Experiment," arXiv:0904.0468v2 (2009).
[2] Schlegel, D., et al, "The BigBOSS Experiment," arXiv:1106.1706v1 (2011).
[3] Sholl, M.J., et al, "BigBOSS: enabling widefield cosmology on the Mayall Telescope," Proc. SPIE 8127, 81270D (2011).
[4] Bely, P., [The Design and Construction of Large Optical Telescopes], Springer-Verlag, New York, 1-28 (2003).
[5] Sawyer, D., et al, "A New Image Acquisition System for the Kitt Peak National Observatory Mosaic-1 Imager," Proc. SPIE 7735, 77353A (2010).
[6] http://www.noao.edu/nstc/kosmos/
[7] http://www.noao.edu/kpno/manuals/flmn/flmn.user.html
[8] Probst, R., et al, "First light with NEWFIRM,", Proc. SPIE 7014, 70142S (2008).
[9] Prescott, R., "Cassegrainian Baffle Design," Appl. Opt., 7, 479–481 (1968).
[10] Moore, K. and Valente, T, "Numerical Method for Cassegrain telescope baffle design," Proc. SPIE 1164, 24 (1989).
[11] Claver, C., et al, "Active optics upgrade to the KPNO 4-m Mayall Telescope," Proc. SPIE 4003, 136 (2000).