BigBOSS Instrument

Natalie Roe, LBNL

AAS Meeting, Austin

January 10, 2012

Introduction

- BigBOSS is currently in the pre-conceptual design phase
  - planning for conceptual design review in FY13
  - construction start in FY14 leading to first light in FY17
  - 5 year survey FY18 – FY22
- The baseline instrument design described here is the basis for the science projections, using a detailed simulation (bbspecsim)
- Trade studies and optimizations are still in progress
- A well-defined program of R&D is underway to reduce technical risks and inform design choices
- A requirements flow-down has been developed to guide the instrument design

BigBOSS Requirements

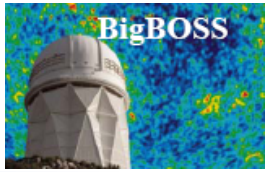

BigBOSS Scientific Objective: Perform a Stage IV BAO Spectroscopic Survey

LEVEL 1
Scientific Requirements

- Measure the distance scale error σ_R/R to < 1% for $0.5 < z < 3.0$
  (in 6 bins with $\Delta\ln(1+z) = 0.2$)
- Measure H(z) to 1.5% up to z=2.5
  (in 4 bins at <z> = 0.7, 1.1, 1.5, 2.5)
- Constrain growth, $\sigma_8(z)$ f(z), with <2% relative error
  ($\Delta z = 0.1$ bins, $k_{max} = 0.2$, for $0.5 < z < 1.5$)
- Measure galaxy power spectrum to < 1% up to z=1.5
  ($\Delta k = 0.02$ Mpc/h bins, $k_{max} = 0.3$)

Additional Scientific Goals

- Inflation: constrain spectral index and its running to < 1%
- Measure the sum of neutrino masses Σm_ν with $\sigma < 0.020$ eV

LEVEL 2
Data Set Requirements

- Survey Area: 14,000 sq deg
- Redshift range:
  - LRGs $0.5 < z < 1.0$
  - ELGs $0.5 < z < 1.6$
  - Tracer QSOs $0.5 < z < 3.5$
  - Ly-α QSOs $2.2 < z < 3.5$
- Galaxy $dN/dV > 1\times10^{-4}$ (h/Mpc)^3
- Number of redshifts: 20M
- Redshift accuracy:
  - $\sigma_z < 0.001(1+z)$ rms
  - < 5% catastrophic failures
  - resolve OII doublet for $0.76 < z < 1.6$

LEVEL 3
Instrument Requirements

- Operational Constraints
  - < 500 nights
  - Instrument compatible with Mayall telescope
  - Preserve use of f/8 secondary
  - Typical seeing, weather for site used in forecasts
- Field of View: 3 deg diameter
- Number of Fibers: 5000
- Operational overheads: total < 60 s/exposure
- Spectral Range and Resolution
  - 360 nm < λ <660 nm: R > 1500
  - 620 nm < λ <840 nm: R > 3000
  - 800 nm < λ <980 nm: R > 4000
- Optical Throughput vs λ
- Fiber Positioning Error < 0.35 asec (rms, includes actuators, guiding, tracking, target astrometry)

Instrument Overview

A photon's path through the BigBOSS instrument:

- Mayall telescope
- Corrector optics
- Focal plane
- Fiber Actuators
- Fiber System
- Spectrographs
- Cameras

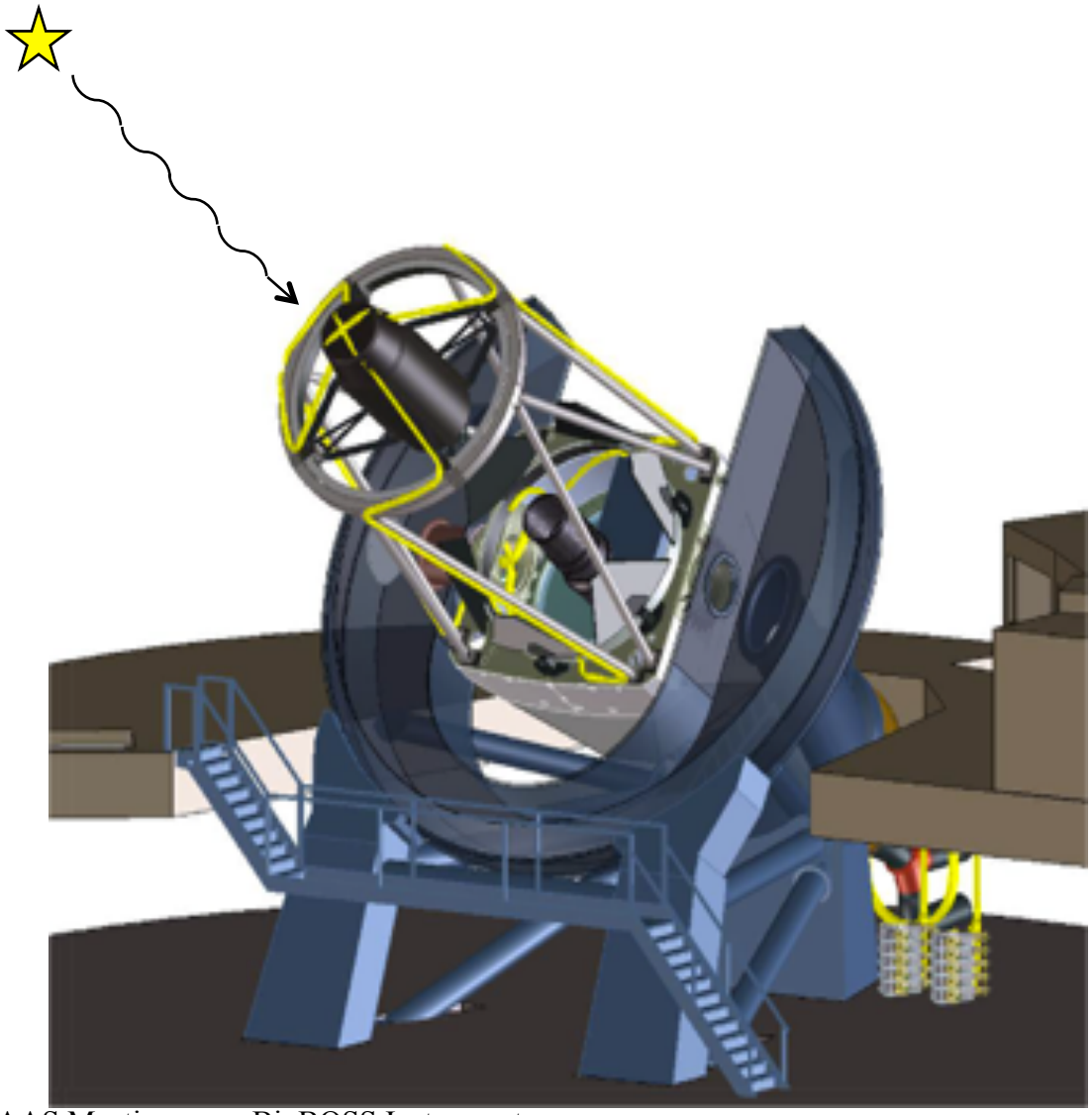

Mayall Telescope

- 3.8m Diameter
- Located at Kitt Peak, AZ
- Operated by NOAO
- Compatible with wide-field corrector optics to achieve 3-degree field of view
- Other 4m telescopes investigated
  - Blanco at CTIO; almost identical to Mayall
    - potential for southern survey next decade
  - CFHT
  - no other 4m class telescopes that are available at reasonable sites are compatible with 3 deg field of view

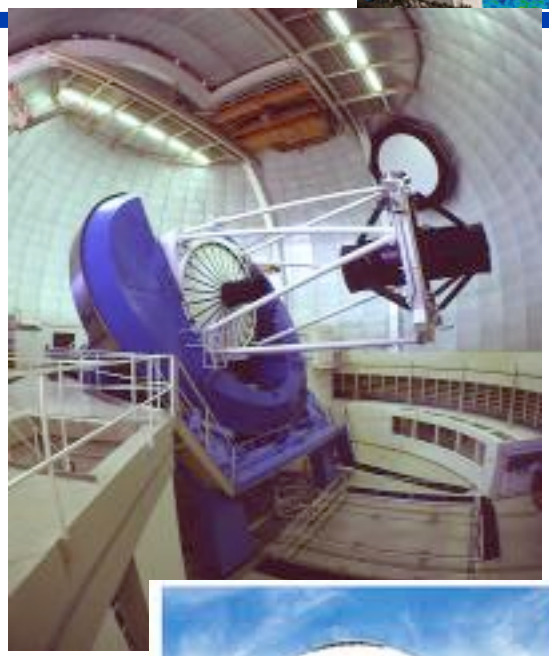

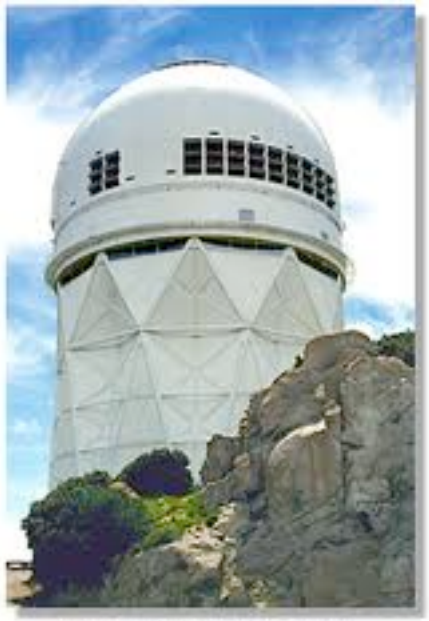

Mayall 4-Meter Telescope

Corrector Optics

- Cage & Barrel Assembly
- Corrector Assembly
  - Corrector ingests light at F/2.8, outputs at F/4.5
  - — Heritage: DES

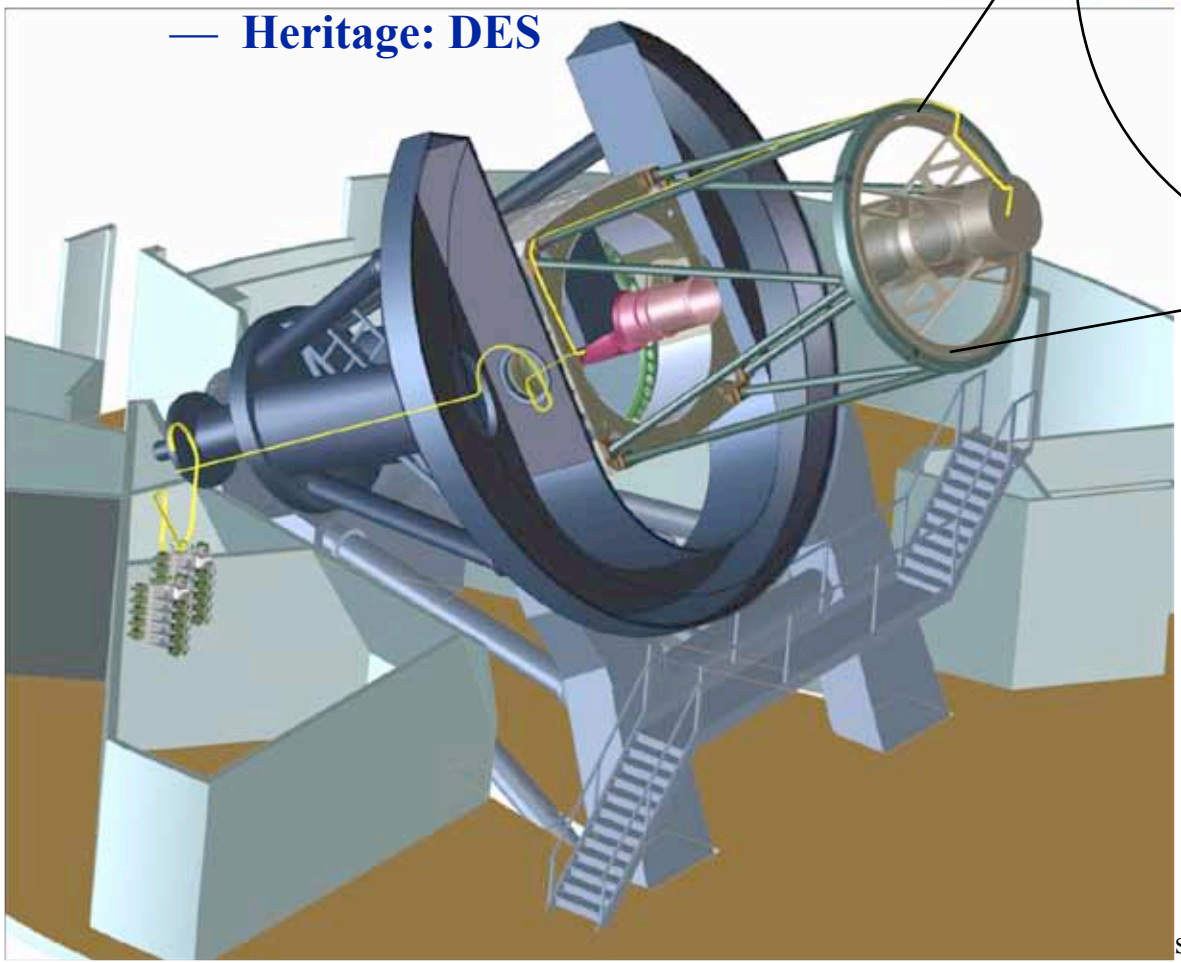

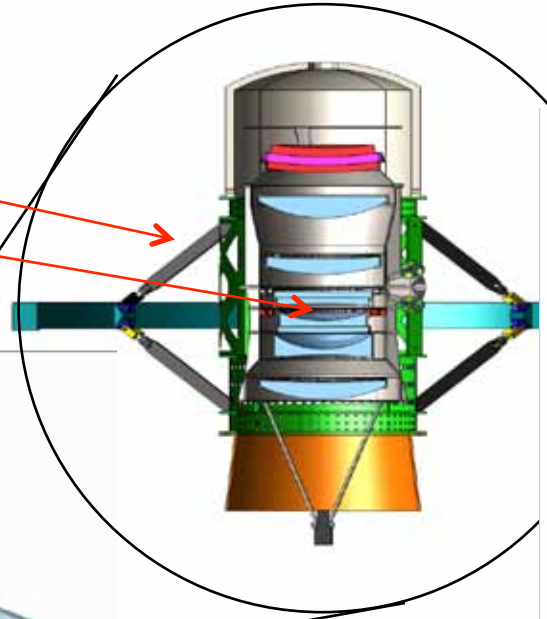

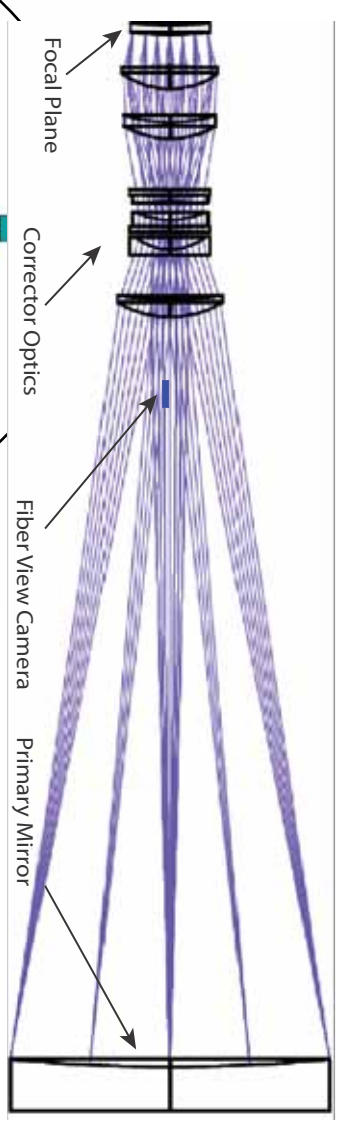

Corrector Design

- 6 optical groups include 2 ADC
- 2 aspheres
- 1.16 m, 1530 kg
- good performance

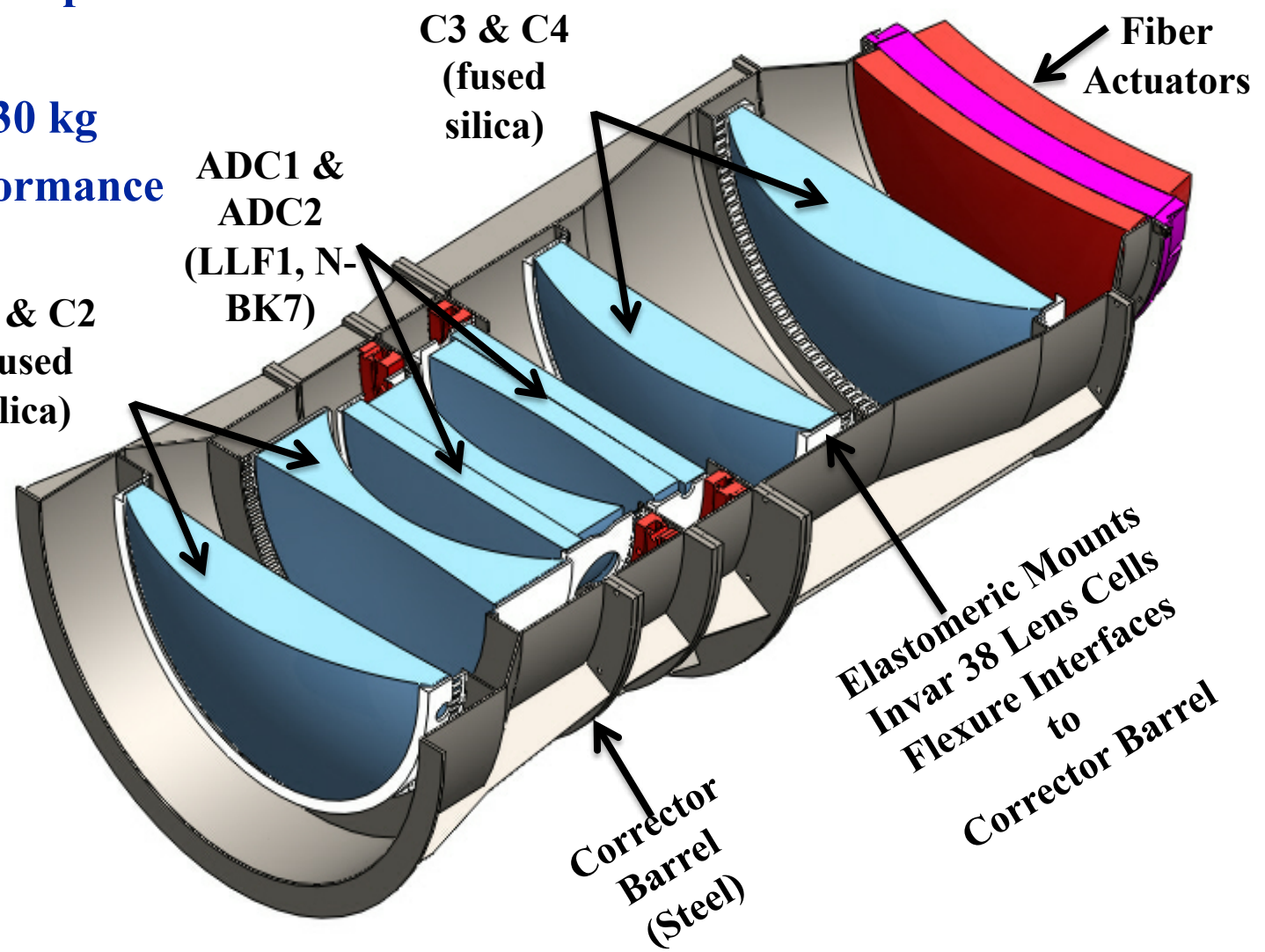

Focal Plane System

- 0.95m diameter
- 10 cm thick
- 5000 actuators
- Heritage: LAMOST

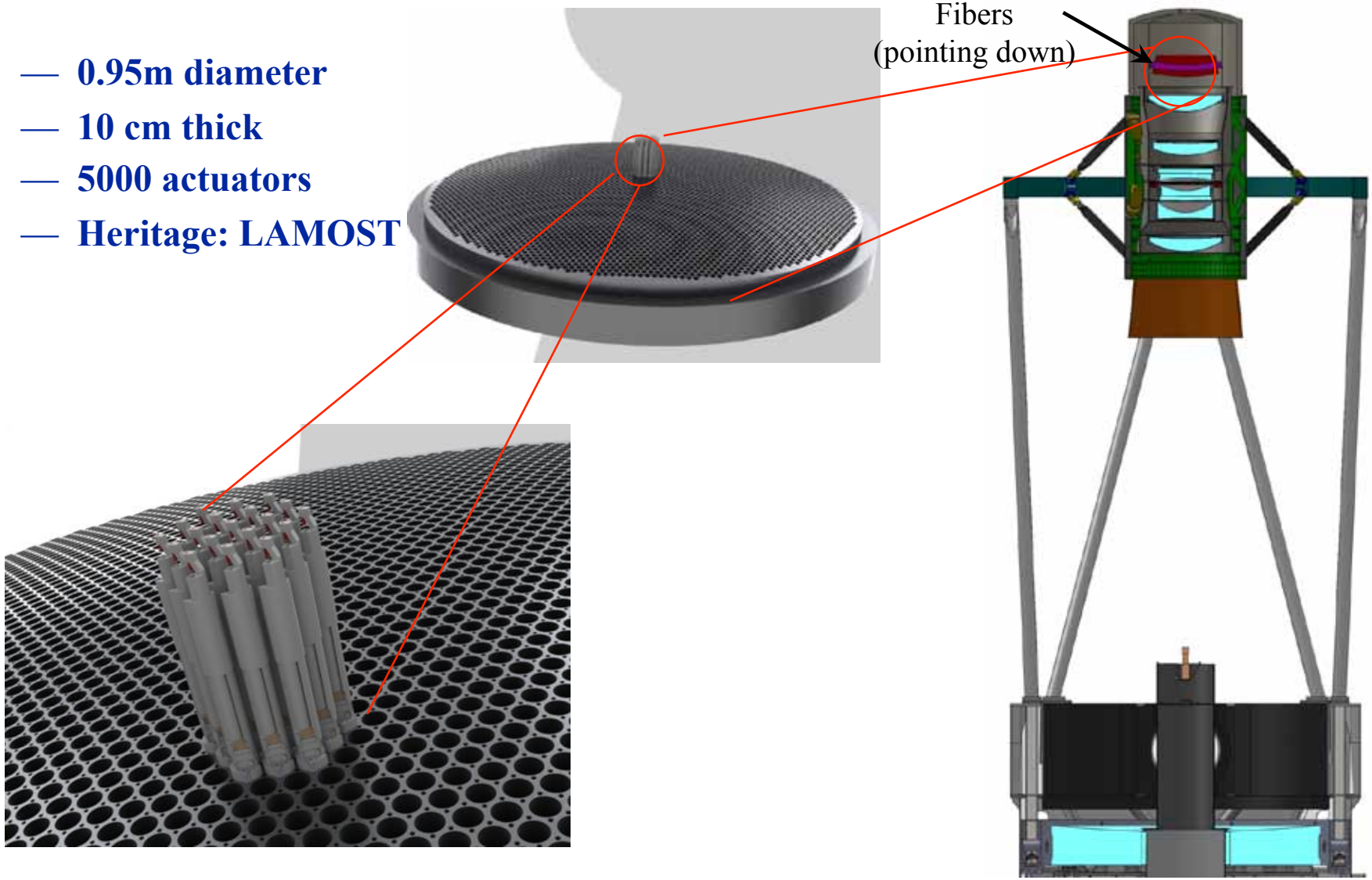

Fiber Actuators

— 5000 actuators on 12 mm pitch

— positioning accuracy 5 um

- **Design**

— 3 designs by LBNL, USTC (China), IAA-CSIC (Spain)

— 12 mm spacing

— both r-θ and θ-θ

— prototypes are built and under test

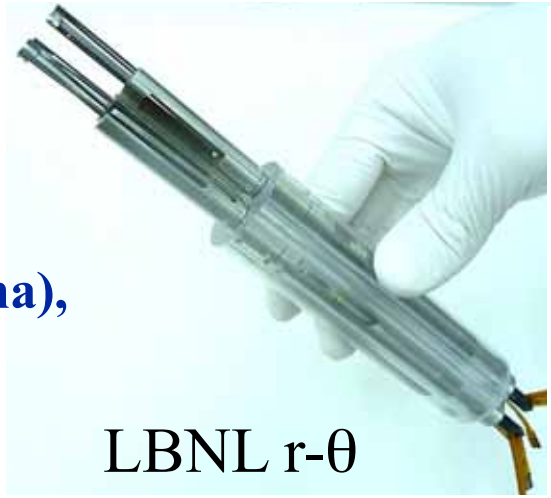

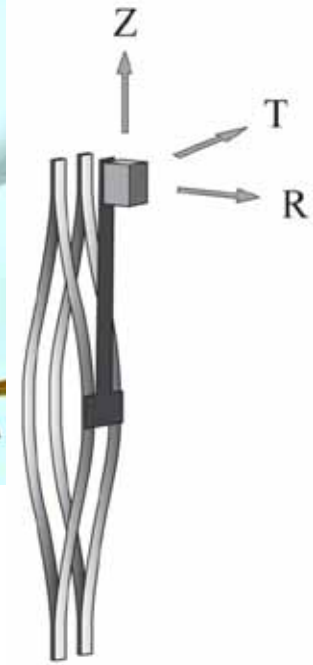

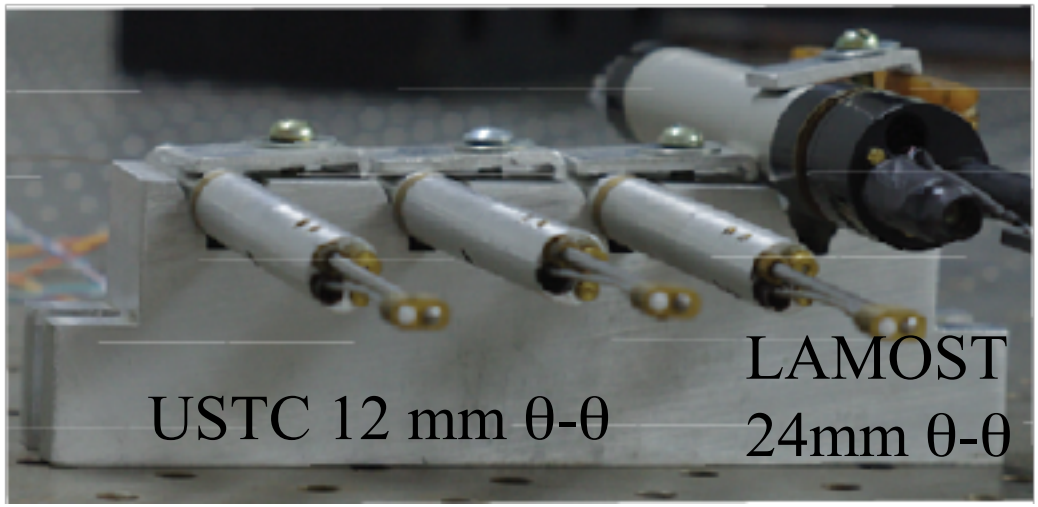

Fiber Camera

Reconstruct *x* and *y* position of fiber tips

- Image back illuminated fiber tips and fiducial fibers
- Multiple 1 second measurements to iterate fiber positions
- Well surveyed fiducial fibers for self calibration

R&D to demonstrate 5 μm reconstruction accuracy

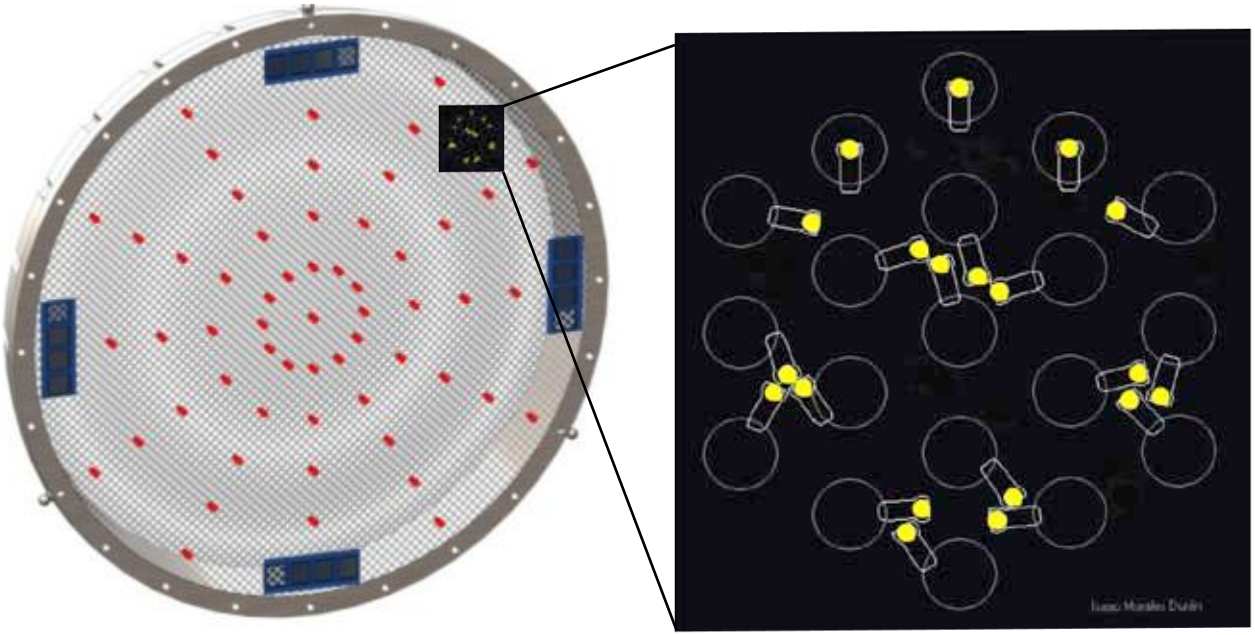

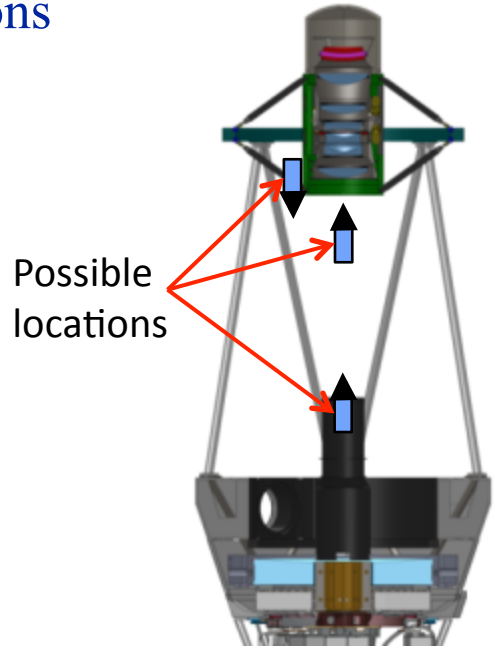

Camera

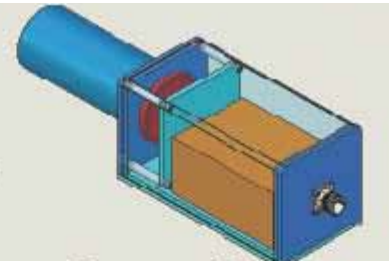

The Fiber System

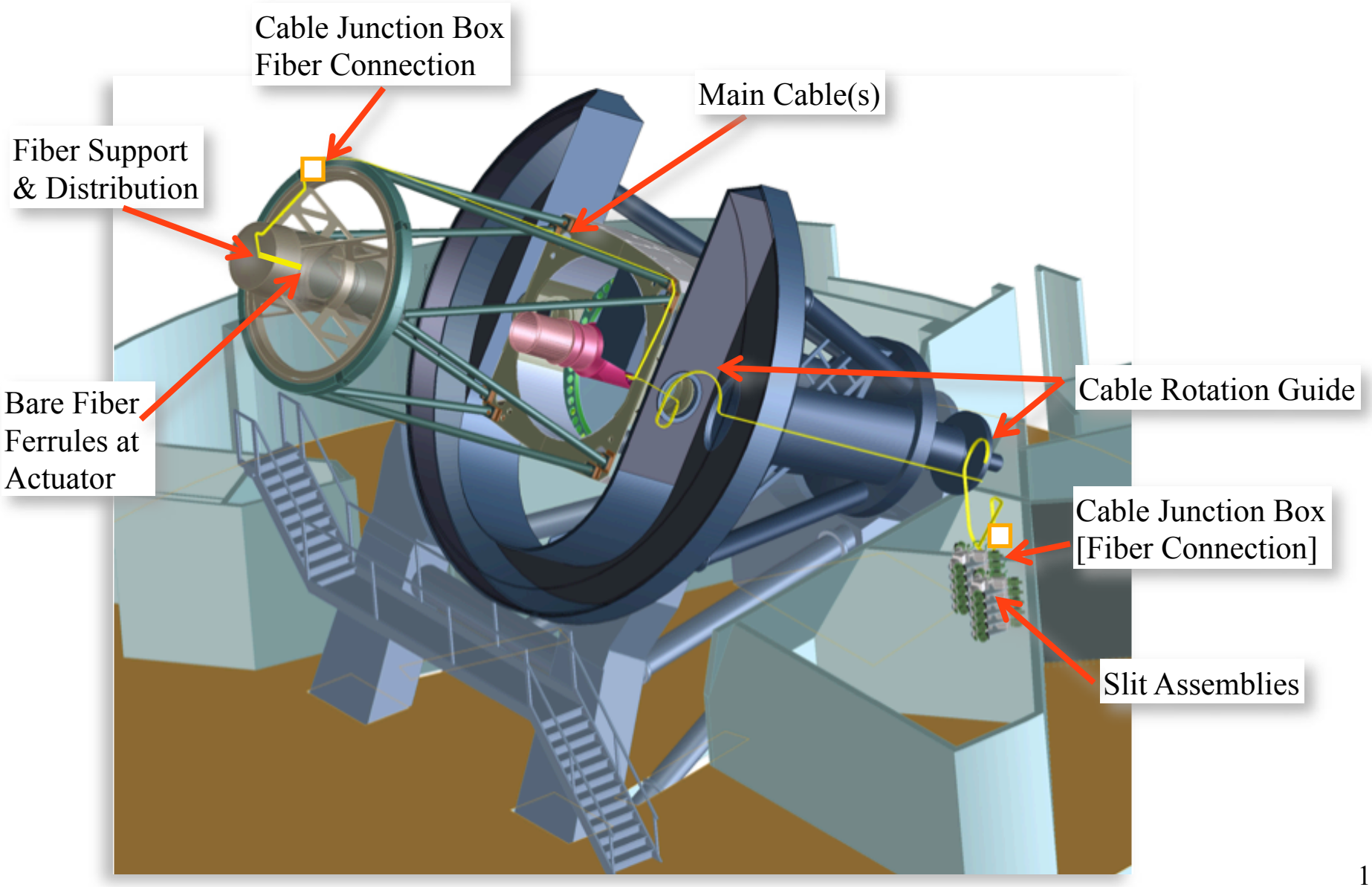

Fiber System

- **Fiber System**
  - **120 um core**
  - **Good throughput down to UV**
  - **Low focal ratio degradation (FRD)**
  - **Heritage: BOSS, FMOS**

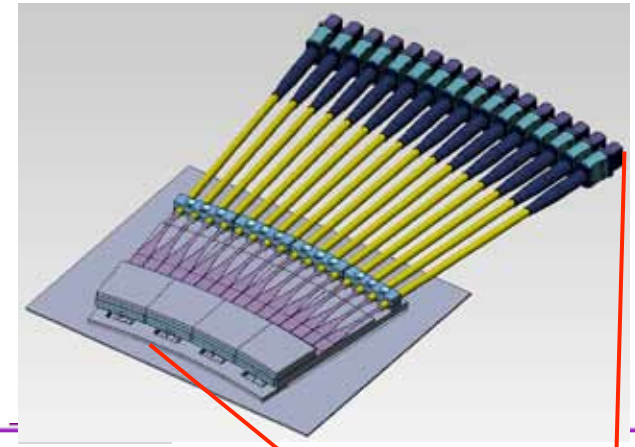

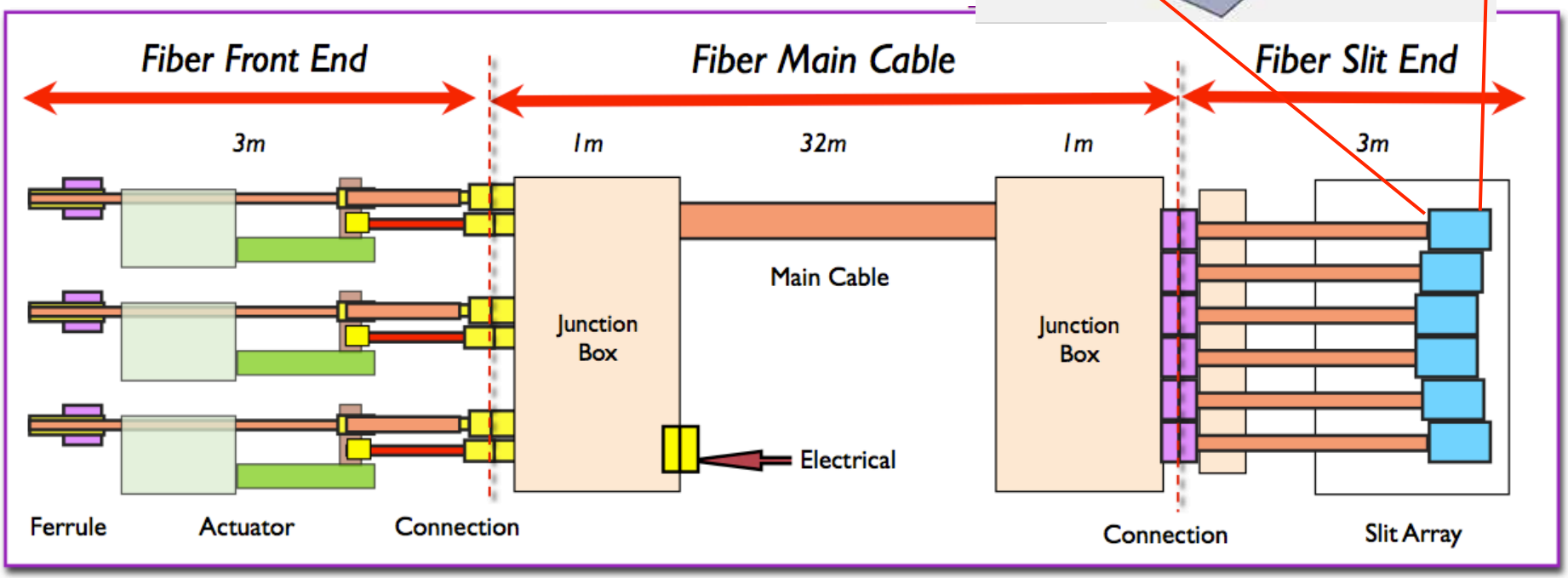

Spectrograph

- 3-arms
- 360nm – 980nm
- Linear pulse-tube cooler
- Heritage: BOSS

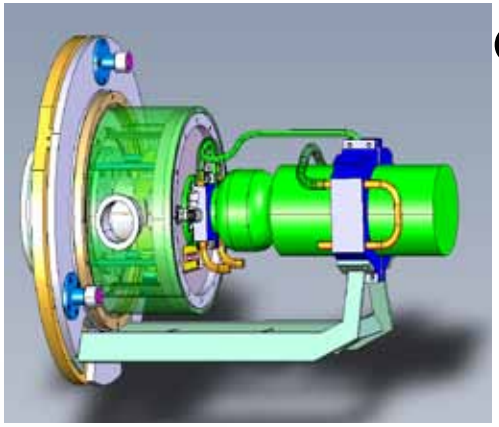

Cryostat

One spectrograph

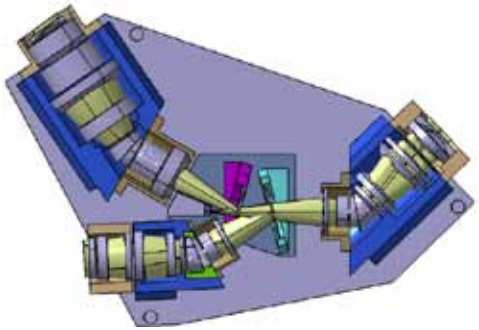

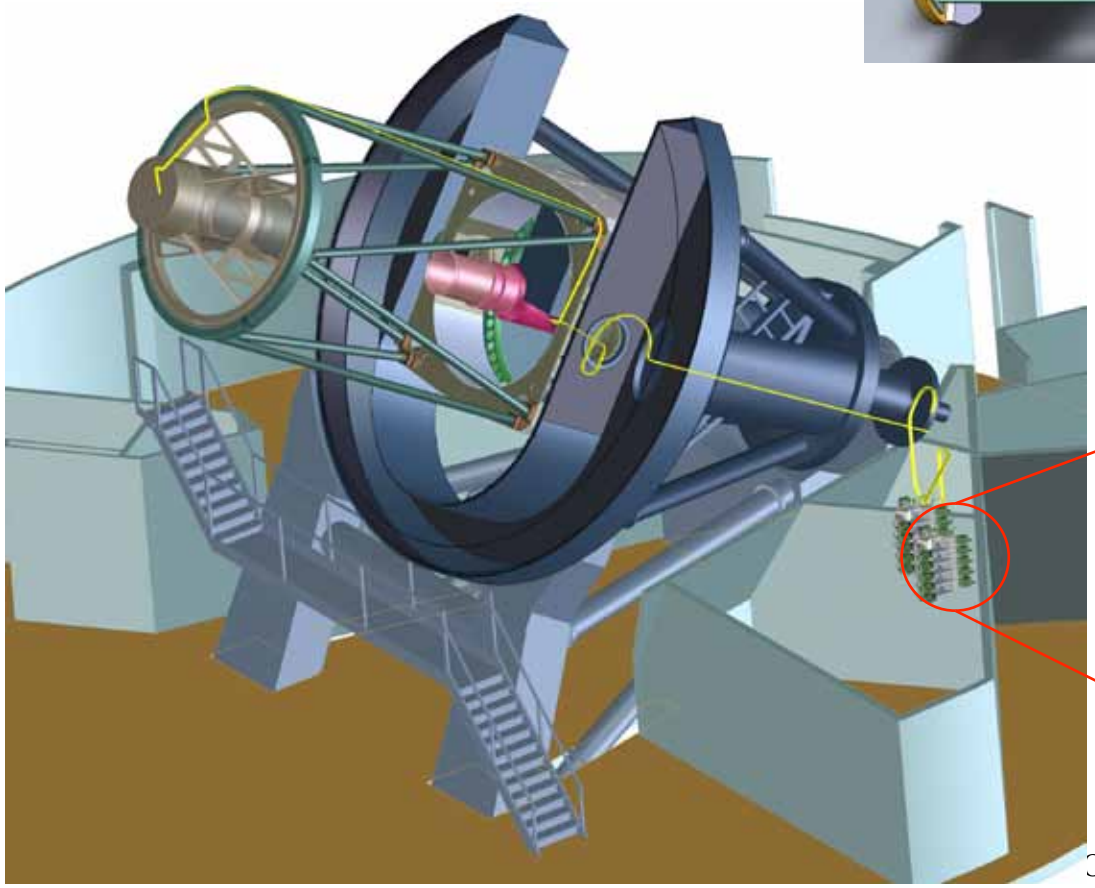

Five spectrographs

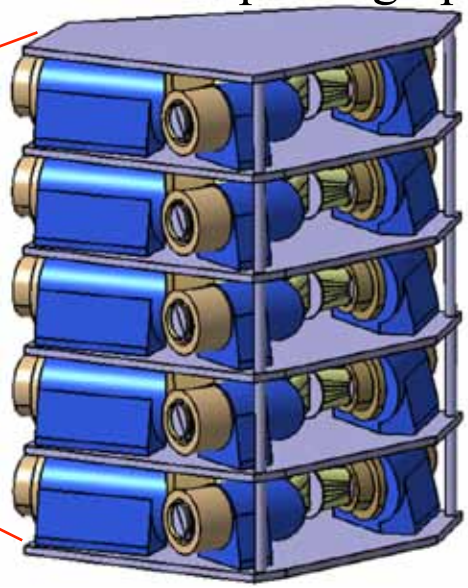

The Spectrograph

- **10 Identical instruments**
  - **3 Channels:**
    UV-: 360 – 660 nm
    Vis: 620 – 840 nm
    NIR: 800– 980nm
  - **One 500 fiber entrance slit**
  - **2 dichroics to split the bandwith**
  - **3 cryostats with a powered lens as window**
  - **Moderate resolution**
    - **~2000 in UV**
    - **~4000 in Vis and N**

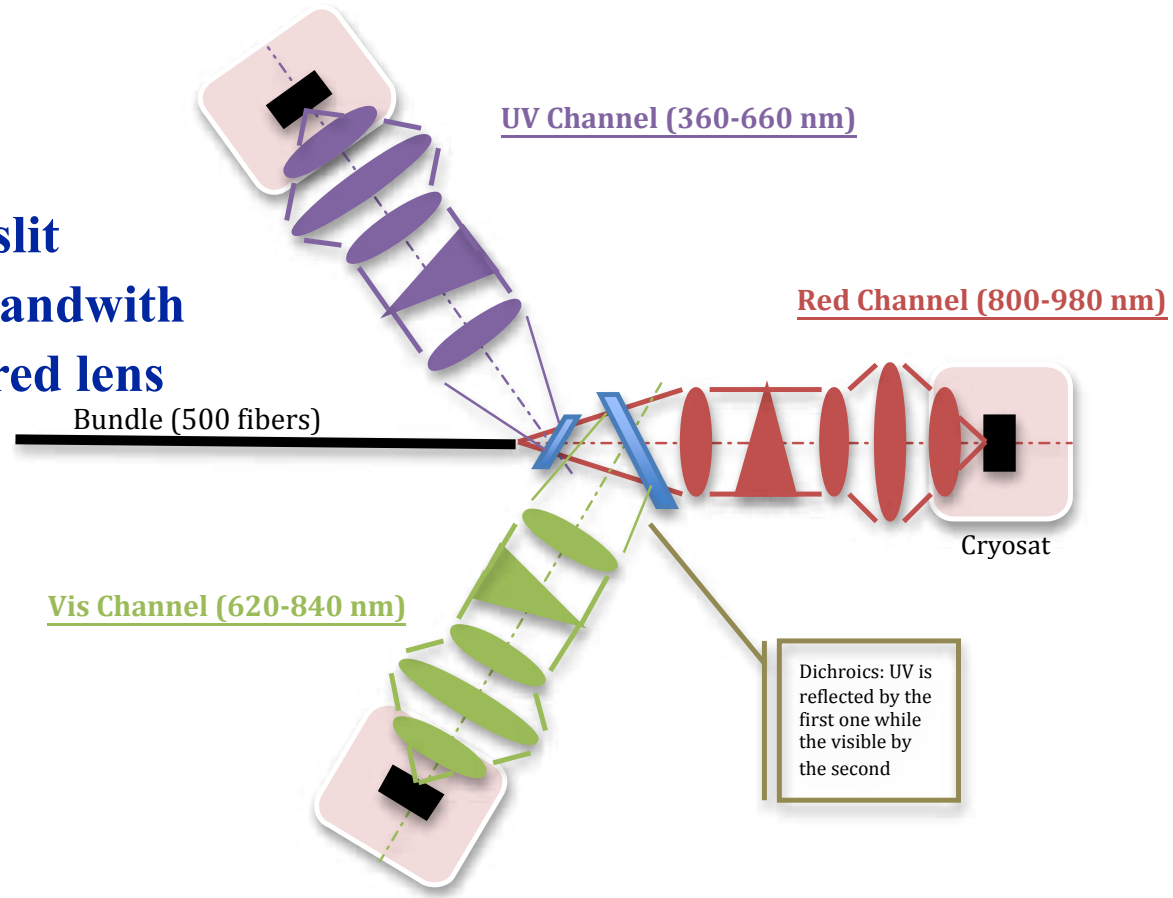

Cameras

- 3 cameras per spectrograph
  - UV, Vis, NIR
- Each camera has a 4k x 4k CCD
  - e2v and LBNL CCDs
  - 15 um pixels
- Linear Pulse Tube cooling
- Heritage: BOSS, Megacam

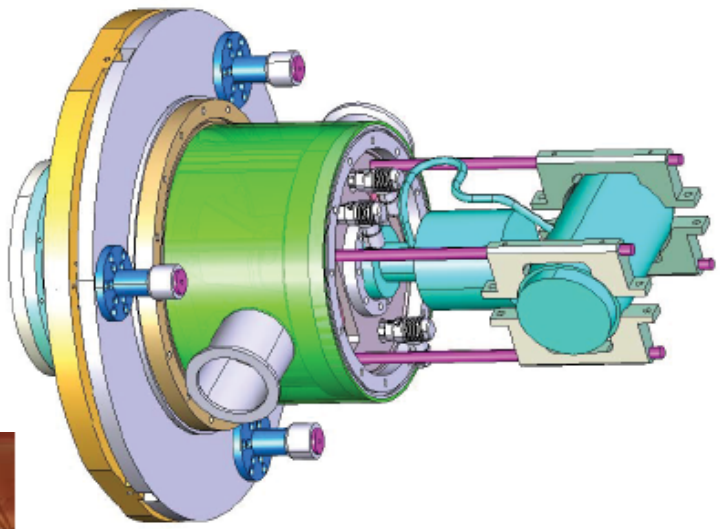

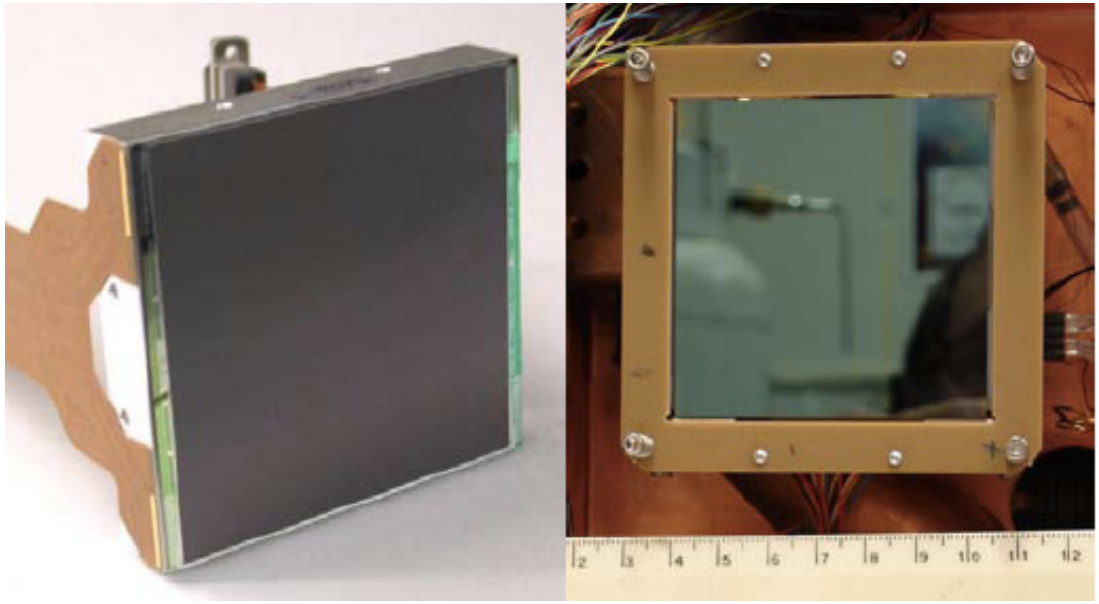

R&D Partners and Expertise

USTC (China): Fiber positioners
LAMOST fiber positioners

IAA (Spain): Focal plane
GTC Nasmyth mount + positioner design

Fermilab (U.S.): Telescope top-end + lens cell
UCL (U.K.): Telescope optics
Dark Energy Survey top-end + optics

Durham + IEU (Korea): Fibers + testing
FMOS + Fibers for physics exp'ts

LAM + CPPM (France): Spectrographs
VIMOS spectrographs

CEA (France): Cryostat systems
Megacam camera

Berkeley Lab (U.S.): CCDs + electronics, optical design, project management
WFIRST/JDEM optical design
DES, BOSS, JDEM detectors

Yale: Fiber view camera
QUEST camera

U Michigan: Calibration hardware
JDEM

SLAC: Guiding/focus
DES, LSST

Ohio State: Data acquisition
BOSS, DES

NOAO: Telescope interface, operations

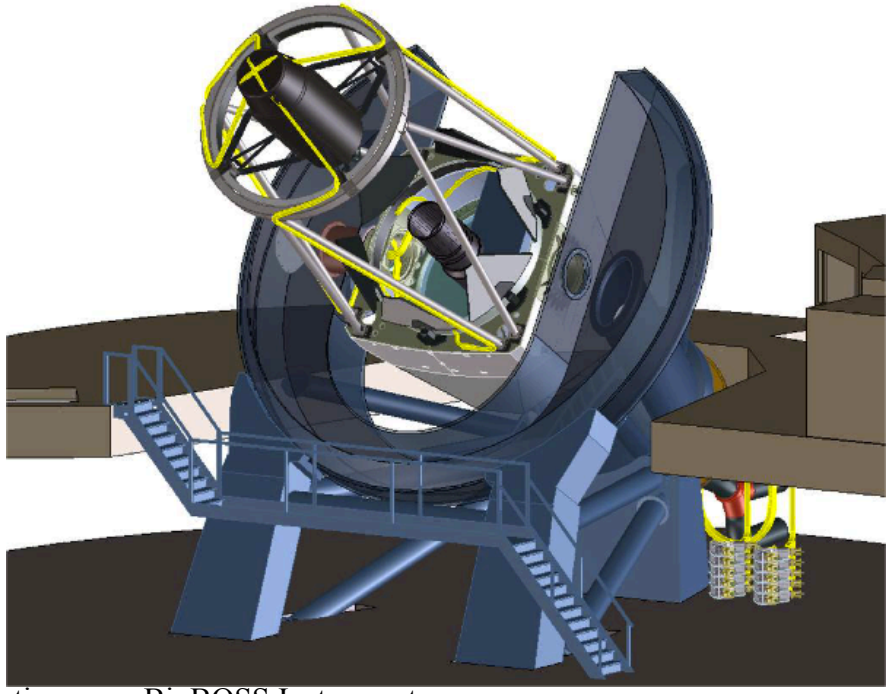

Summary

- BigBOSS instrument design is well-advanced for pre-conceptual phase
- Design is requirements driven
- Heritage from prior instruments reduces risk
- Expert collaboration assembled to deliver all components